Cod. 15339 – 15/12/2020

BERMA

Gearbox RT 650

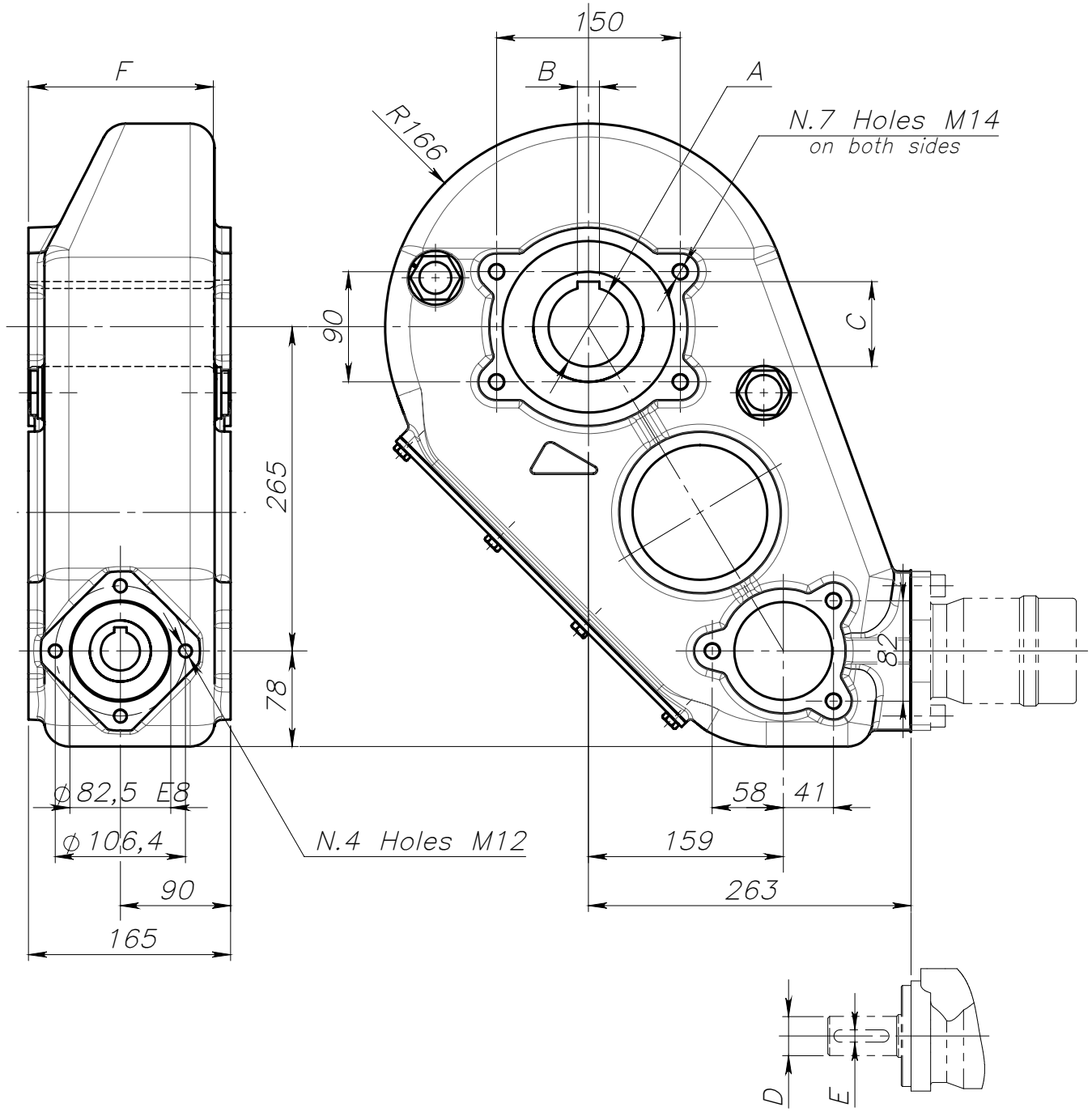

Code	A E8	B E8	C +0,2 0	D	E	F Key length	Weight kg	Ratio	Output torque Nm	Oil Type	Oil Quantity kg	Working Temperature
15376	55	16	59,3	25	8	151	68	37,8:1	6400	SAE 90 EP	6,0	−20° C +80° C
15377	60	18	64,4									
15378	65	18	69,4									
15379	55	16	59,3	32	10							
15380	60	18	64,4									
15381	65	18	69,4									