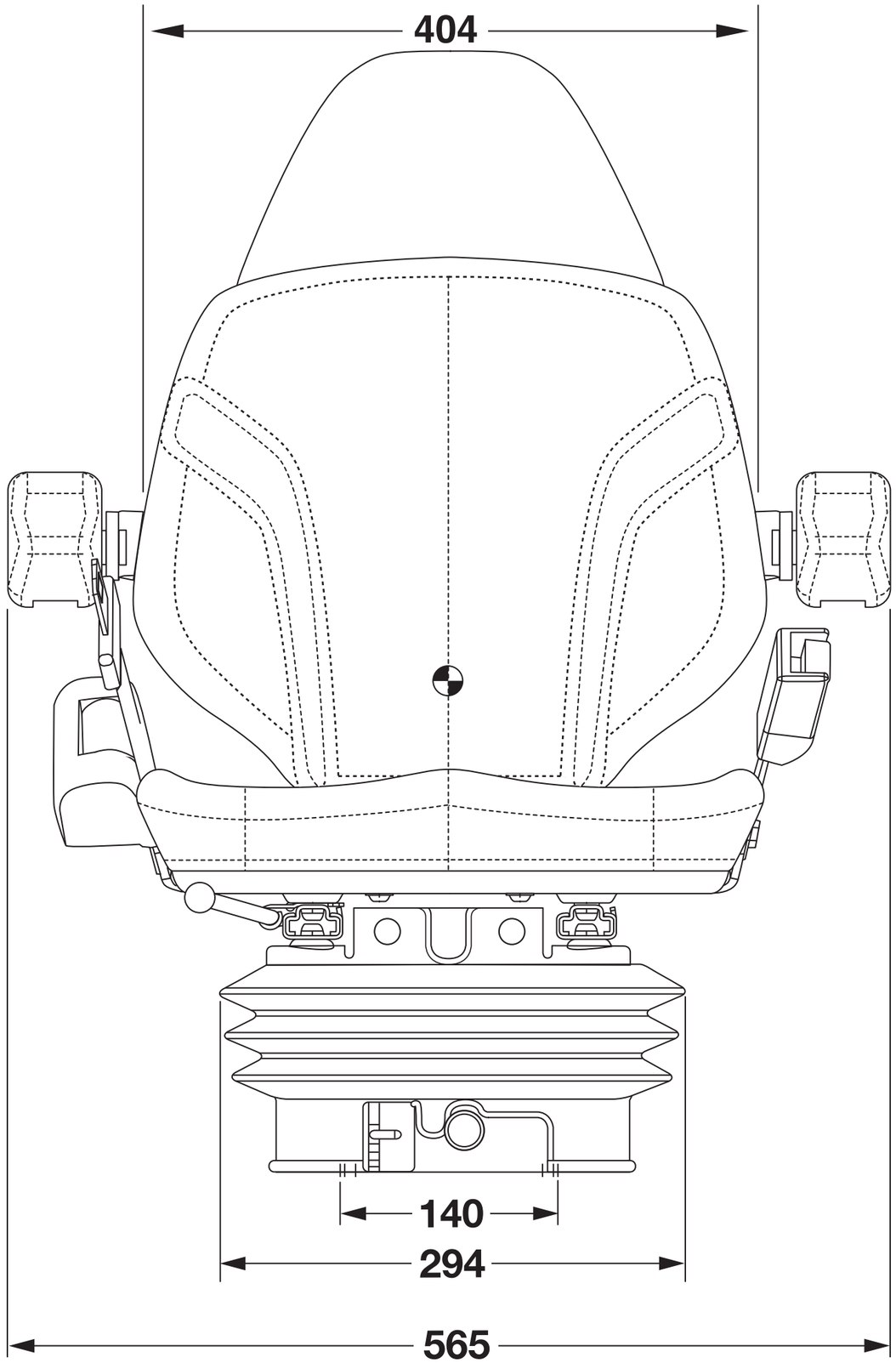
404
140
294
565

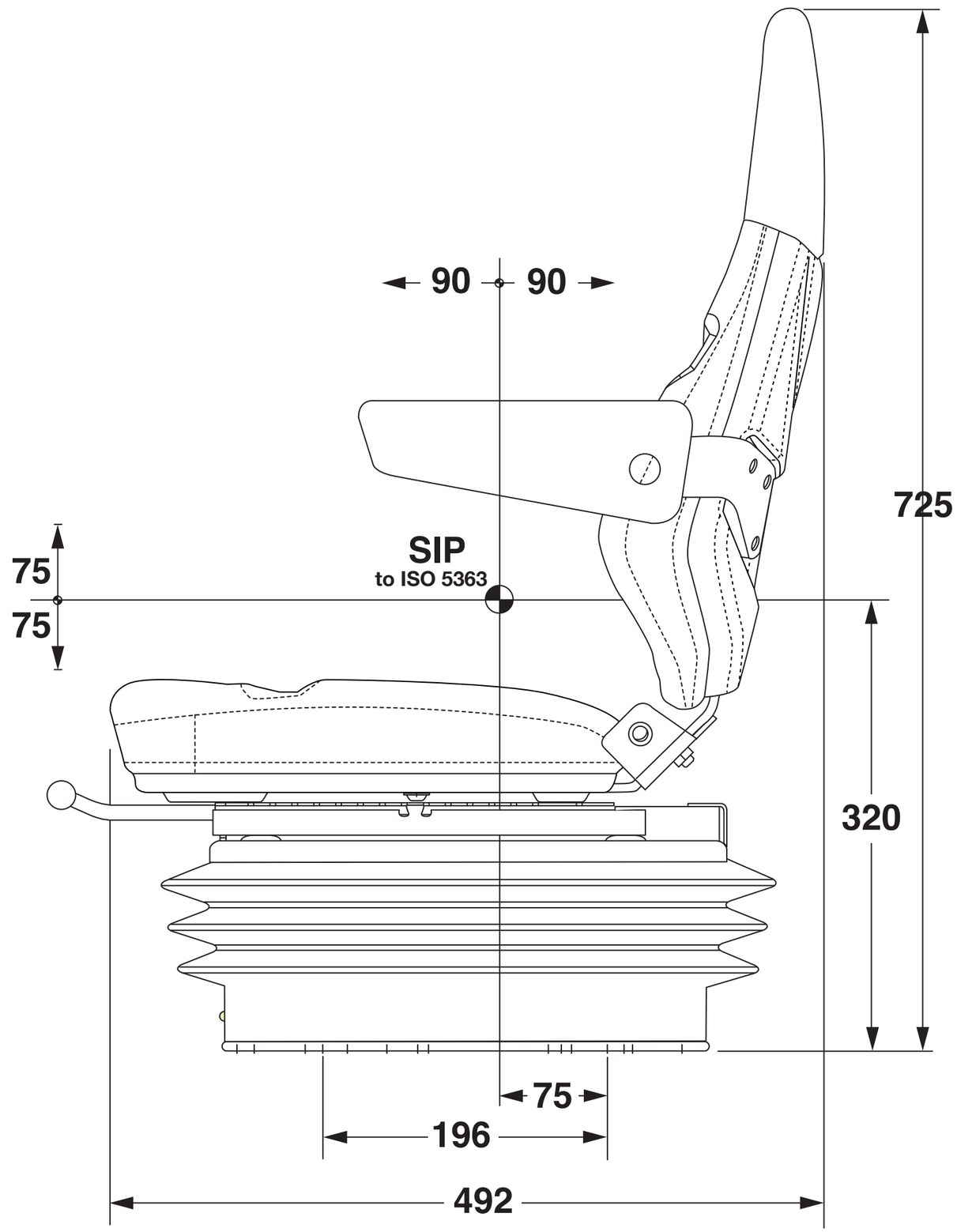
90
90
SIP
to ISO 5363
75
75
725
320
75
196
492